МУЗЦЕНТР
МУЗЫКАЛЬНОЕ ОБОРУДОВАНИЕ
https://muzcentre.ru

ProDX SERIES™

Wireless Digital Mixers

OWNER'S MANUAL

MACKIE®

Important Safety Instructions

1. Read these instructions.
2. Keep these instructions.
3. Heed all warnings.
4. Follow all instructions.
5. Do not use this apparatus near water.
6. Clean only with a dry cloth.
7. Do not block any ventilation openings. Install in accordance with the manufacturer's instructions.
8. Do not install near any heat sources such as radiators, heat registers, stoves, or other apparatus (including amplifiers) that produce heat.
9. Do not defeat the safety purpose of the polarized or grounding-type plug. A polarized plug has two blades with one wider than the other. A grounding-type plug has two blades and a third grounding prong. The wide blade or the third prong are provided for your safety. If the provided plug does not fit into your outlet, consult an electrician for replacement of the obsolete outlet.
10. Protect the power cord from being walked on or pinched particularly at plugs, convenience receptacles, and the point where they exit from the apparatus.
11. Only use attachments/accessories specified by the manufacturer.
12. Use only with a cart, stand, tripod, bracket, or table specified by the manufacturer, or sold with the apparatus. When a cart is used, use caution when moving the cart/apparatus combination to avoid injury from tip-over.

13. Unplug this apparatus during lightning storms or when unused for long periods of time.
14. Refer all servicing to qualified service personnel. Servicing is required when the apparatus has been damaged in any way, such as power-supply cord or plug is damaged, liquid has been spilled or objects have fallen into the apparatus, the apparatus has been exposed to rain or moisture, does not operate normally, or has been dropped.
15. This apparatus shall not be exposed to dripping or splashing, and no object filled with liquids, such as vases or beer glasses, shall be placed on the apparatus.
16. Do not overload wall outlets and extension cords as this can result in a risk of fire or electric shock.
17. The MAINS plug or an appliance coupler is used as the disconnect device, so the disconnect device shall remain readily operable.

CAUTION

RISK OF ELECTRIC SHOCK! DO NOT OPEN!

CAUTION: TO REDUCE THE RISK OF ELECTRIC SHOCK DO NOT REMOVE COVER (OR BACK). NO USER-SERVICEABLE PARTS INSIDE. REFER SERVICING TO QUALIFIED PERSONNEL.

The lightning flash with arrowhead symbol within an equilateral triangle is intended to alert the user to the prescence of uninsulated "dangerous voltage" within the product's enclosure, that may be of significant magnitude to constitute a risk of electric shock to persons.

The exclamation point within an equilateral triangle is intended to alert the user of the prescence of important operating and maintaining (servicing) instructions in the literature accompanying the appliance.

WARNING — To reduce the risk of fire or electric shock, do not expose this apparatus to rain or moisture.

Laite on liitettävä suojakoskettimilla varustettuun pistorasiaan.

Apparatet må tilkoples jordet stikkontakt.

Apparaten skall anslutas till jordat uttag.

18. NOTE: This equipment has been tested and found to comply with the limits for a Class B digital device, pursuant to part 15 of the FCC Rules. These limits are designed to provide reasonable protection against harmful interference in a residential installation. This equipment generates, uses, and can radiate radio frequency energy and, if not installed and used in accordance with the instructions, may cause harmful interference to radio communications. However, there is no guarantee that interference will not occur in a particular installation.
    If this equipment does cause harmful interference to radio or television reception, which can be determined by turning the equipment off and on, the user is encouraged to try to correct the interference by one or more of the following measures:
    - Reorient or relocate the receiving antenna.
    - Increase the separation between the equipment and the receiver.
    - Connect the equipment into an outlet on a circuit different from that to which the receiver is connected.
    - Consult the dealer or an experienced radio/TV technician for help.

    CAUTION: Changes or modifications to this device not expressly approved by LOUD Technologies Inc. could void the user's authority to operate the equipment under FCC rules.
19. This device complies with FCC radiation exposure limits set forth for an uncontrolled environment. This device should be installed and operated with minimum distance 20cm between the radiator & your body.
20. This apparatus does not exceed the Class A/Class B (whichever is applicable) limits for radio noise emissions from digital apparatus as set out in the radio interference regulations of the Canadian Department of Communications.

ATTENTION — *Le présent appareil numérique n'émet pas de bruits radioélectriques dépassant las limites applicables aux appareils numériques de class A/de class B (selon le cas) prescrites dans le réglement sur le brouillage radioélectrique édicté par les ministere des communications du Canada.*

21. This device complies with Industry Canada licence-exempt RSS standard(s). Operation is subject to the following two conditions:

(1) this device may not cause interference, and

(2) this device must accept any interference, including interference that may cause undesired operation of the device.

Le présent appareil est conforme aux CNR d'Industrie Canada applicables aux appareils radio exempts de licence. L'exploitation est autorisée aux deux conditions suivantes :

(1) l'appareil ne doit pas produire de brouillage, et

(2) l'utilisateur de l'appareil doit accepter tout brouillage radioélectrique subi, même si le brouillage est susceptible d'en compromettre le fonctionnement.

22. Exposure to extremely high noise levels may cause permanent hearing loss. Individuals vary considerably in susceptibility to noise-induced hearing loss, but nearly everyone will lose some hearing if exposed to sufficiently intense noise for a period of time. The U.S. Government's Occupational Safety and Health Administration (OSHA) has specified the permissible noise level exposures shown in the following chart.
    According to OSHA, any exposure in excess of these permissible limits could result in some hearing loss. To ensure against potentially dangerous exposure to high sound pressure levels, it is recommended that all persons exposed to equipment capable of producing high sound pressure levels use hearing protectors while the equipment is in operation. Ear plugs or protectors in the ear canals or over the ears must be worn when operating the equipment in order to prevent permanent hearing loss if exposure is in excess of the limits set forth here:

Duration, per day in hours	Sound Level dBA, Slow Response	Typical Example
8	90	Duo in small club
6	92	
4	95	Subway Train
3	97	
2	100	Very loud classical music
1.5	102	
1	105	Greg screaming at Troy about deadlines
0.5	110	
0.25 or less	115	Loudest parts at a rock concert

Correct Disposal of this product: This symbol indicates that this product should not be disposed of with your household waste, according to the WEEE Directive (2012/19/EU) and your national law. This product should be handed over to an authorized collection site for recycling waste electrical and electronic equipment (EEE). Improper handling of this type of waste could have a possible negative impact on the environment and human health due to potentially hazardous substances that are generally associated with EEE. At the same time, your cooperation in the correct disposal of this product will contribute to the effective usage of natural resources. For more information about where you can drop off your waste equipment for recycling, please contact your local city office, waste authority, or your household waste disposal service.

Contents

Important Safety Instructions 2
Contents 3
Features 3
Introduction 4
How To Use This Manual 4
Things To Remember 4
Getting Started 4
Hookup Diagrams 5
MixerConnect App 8

ProDX: Rear Panel Features 8
1. Power Connector 8
2. Power Switch 8
3. XLR and 1/4" Combo Inputs 8
4. Bluetooth / Line In 9
5. Main Out L/R 9
6. Aux Out 9
7. Phones 9
8. Update 9

ProDX: Front Panel Features 10
9. Control Bridge 10
10. Meters 10
11. Channel Buttons 10
12. Bluetooth / Line In Button 10
13. Level 10
14. MAIN Button 11
15. MIX Button 11
16. FX Button 11
17. Phones Button 11

Factory Reset [aka Vulcan Mind Meld] 11
Wrap-Up 11

Appendix A: Service Information 12
Appendix B: Technical Information 13
ProDX Dimensions 14
ProDX Block Diagram 16
Appendix C: Table of Effects Presets 17
Limited Warranty 18

Like us

Follow us

Watch our dang videos

Part No. SW1153 Rev. A 04/16

©2016 LOUD Technologies Inc. All Rights Reserved.

Features

Simple and Intuitive

- Control every level from the single knob front panel interface
- Clean and professional design looks great anywhere
- Ultra-compact for effortless transport and a perfect fit in tight spaces
- Integrated control bridge holds your phone for a quick view of your mix

Wireless Streaming and Control via the MixerConnect™ app on iOS and Android™

- Stream music or backing tracks via Bluetooth®
- Control levels, EQ, effects and more from anywhere
- Recallable mix presets for quick setup
- Place the mixer out of sight without losing any control

Sound Your Best with Powerful Built-in Processing

- Dial in your sound with musical 3-band EQ with low-cut per channel
- No-hassle channel compression adds punch to any vocal or instrument
- Sweeten your mix with 16 great-sounding ReadyFX™ reverbs, delays and choruses
- Outputs feature a flexible graphic EQ for fine tuning your mix

All the Right I/O

- Wide-Z™ inputs for simple connection of mics, guitars, keyboards and more with no gain adjustments needed
- Connect your media player via the stereo 1/8" input or stream wirelessly via Bluetooth®
- L/R main outs to connect to your PA speakers, power amps or studio monitors
- Aux send(s) allow you to create personal / multiple monitor or separate zone mix(es)
- Headphone output for critical listening or silent practice

Android is a trademark of Google Inc.

Introduction

ProDX Series mixers bring powerful digital mixing to solo performers, small bands, venues and commercial applications that require lower channel counts with an intuitive, easy-to-use interface that looks great anywhere.

Keep it simple with its single knob design, perfect for quick and easy level adjustments. Get total wireless control via the MixerConnect™ app to unlock recallable mix presets, built-in processing like EQ and compression per channel and great-sounding ReadyFX™ effects.

Plus, with Bluetooth® streaming, you can wirelessly play back music or backing tracks right from your phone. ProDX mixers deliver the powerful benefits of digital mixing with wireless control in our most compact mixer designs ever.

How to Use This Manual:

After this introduction, a getting started guide will help you get things set up fast. The hookup diagrams show some typical setups, while the remaining sections provide details of ProDX.

This icon marks information that is critically important or unique to ProDX. For your own good, read and remember them.

This icon leads you to in-depth explanations of features and practical tips. They usually have some valuable nuggets of information.

This icon draws attention to certain features and functions relating to the usage of ProDX.

Things to Remember:

- Never listen to loud music for prolonged periods. Please see the Safety Instructions on page 2 for information on hearing protection.
- Save the shipping box and packing materials! You may need them someday. Besides, the cats will love playing in them and jumping out at you unexpectedly. Remember to pretend like you are surprised!
- Save your sales receipt in a safe place.

Getting Started

The following steps will help you set up ProDX quickly.

NOTE

These startup instructions are intended for the hardware only. Once proven that ProDX performs as desired, then pair it with a smart phone and control it via the MixerConnect app (as detailed on page 8).

1. Make all initial connections with the power switch OFF.

2. Connect cords from the main outs to powered speakers (or to an amplifier connected to passive speakers).

3. Plug signal sources into ProDX, such as:

   - Microphones plugged into the mic inputs.
   - Instrument level sources, such as acoustic guitars w/ active pickups and line-level sources such as keyboards and drum machines plugged into the 1/4" inputs.
   - Music playback source such as a smart phone, computer or MP3 player plugged into the 1/8" input or smart phone paired and connected via Bluetooth.

4. Push the power supply connector securely into the mixer's connector and plug the other end into an AC outlet.

5. Turn the ProDX on.

6. Turn the powered speakers (or amplifiers) on.

7. Be sure that the volume of the input is set correctly. Select the input channel by pressing the corresponding channel button and ensure the level is about halfway. Adjust the rotary knob if you need a different level for your source.

8. Slowly bring up the main output level to a comfortable listening level by selecting the main output on the front panel and slowly turning the encoder to the right.

9. Read the rest of this manual and the MixerConnect app Reference Guide for more details!

Hookup Diagrams

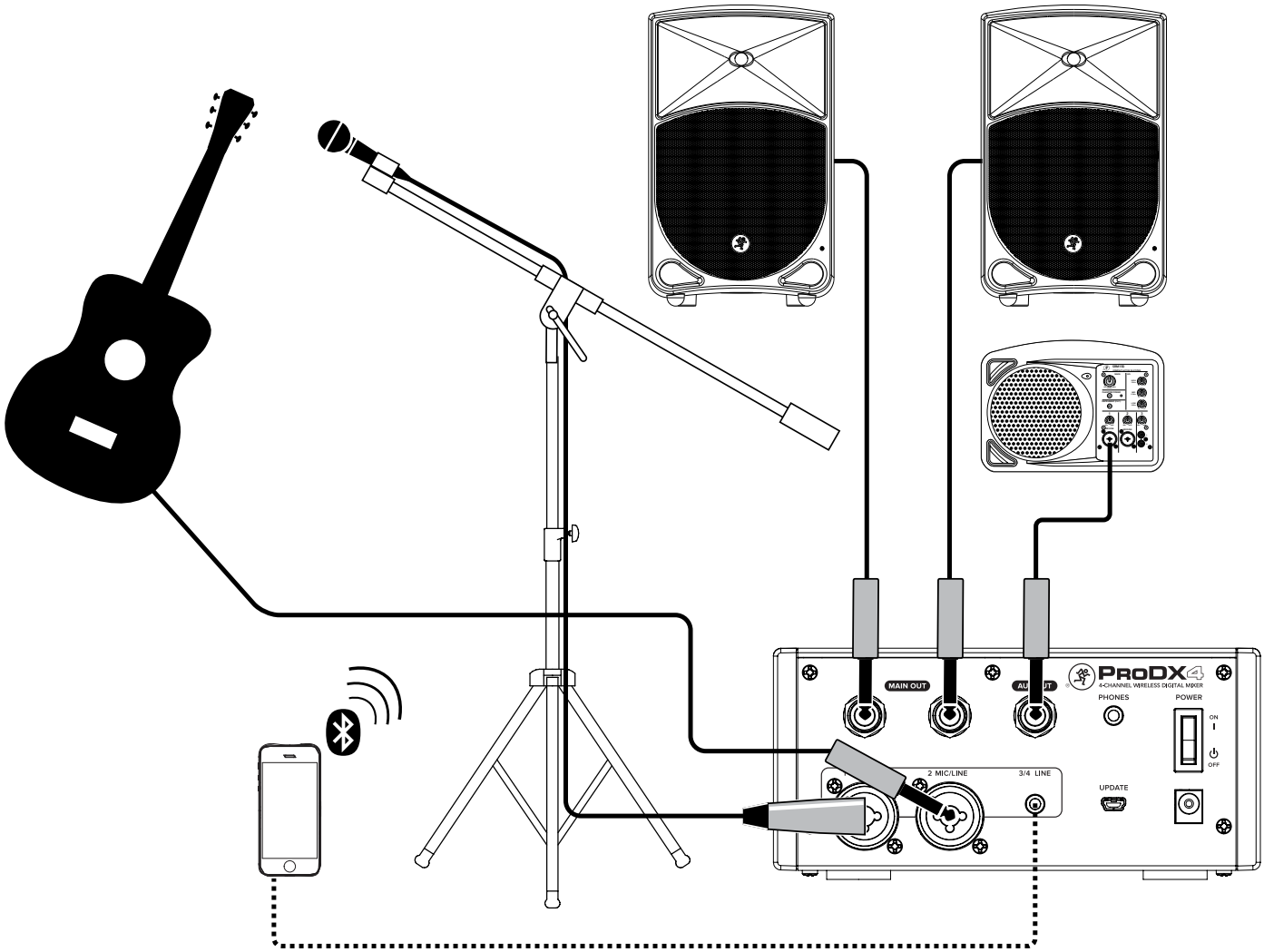

Because of its compact size, a ProDX4 is the perfect tool for a singer-songwriter / café-type setup. In this example, you brought your favorite acoustic guitar and microphone (along with various cables for connection). And don't forget the smart phone, too! With it, you're able to publish tour dates via social media. More importantly, you can connect to ProDX via Bluetooth (or 1/8" input) and jam along to the backing tracks that are on the device and use MixerConnect to control the ProDX wirelessly.

The mic is connected to the channel 1 input and the guitar to the channel 2 input. As mentioned above, the smart phone is connected via Bluetooth (or 1/8" stereo input). Adjust the levels of all inputs as described on page 10.

Your brilliant, beautiful songs are then delivered – in this case, at least – through a pair of Thump12 loudspeakers to your eager audience. And you utilize an SRM150 as your own personal monitor; it's connected via the ProDX aux out jack.

Solo Performer

Hookup Diagrams continued...

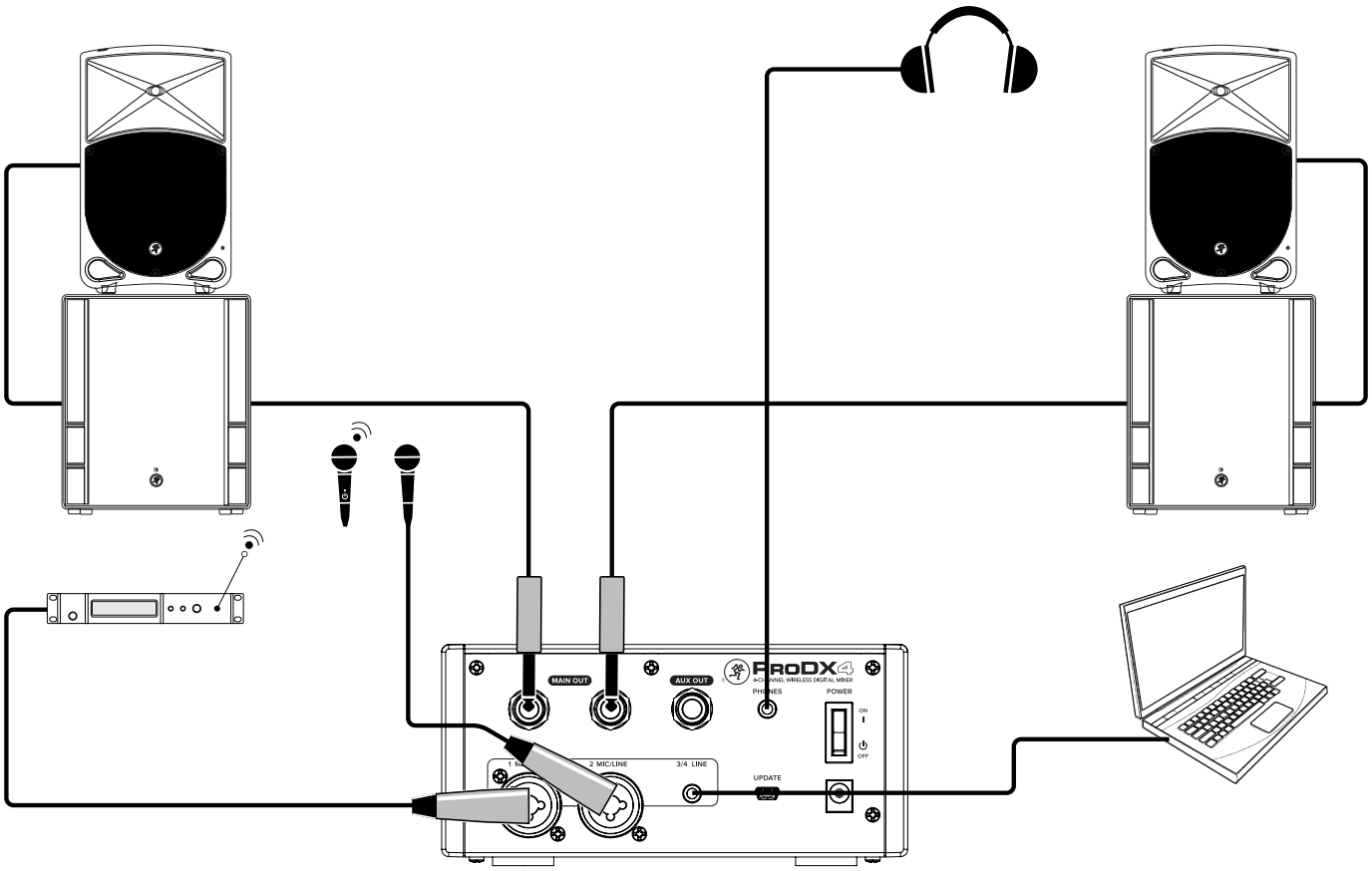

Sure, sure, we just raved about its compact size on the previous page, but don't let the size fool you. The ProDX has massive capabilities and we're about to show you...in this example! Something like this is good for a typical bar/club install and/or DJ setup. Here, the house DJ has all the necessary gear on-hand for an unforgettable party at your favorite venue be it the local dance club, warehouse party, block party and more!

Mics are connected to the channel 1 [wireless] and 2 inputs and a laptop – i.e. music library – to the stereo 1/8" channel 3/4 input. The input levels may be adjusted as described on page 10.

Here the playlist is delivered through a pair of Thump18S subwoofers and Thump15 loudspeakers to the audience that just can't stop dancing! And hey, what's a DJ setup without a pair of headphones?

Bar Install / DJ Setup

Hookup Diagrams continued...

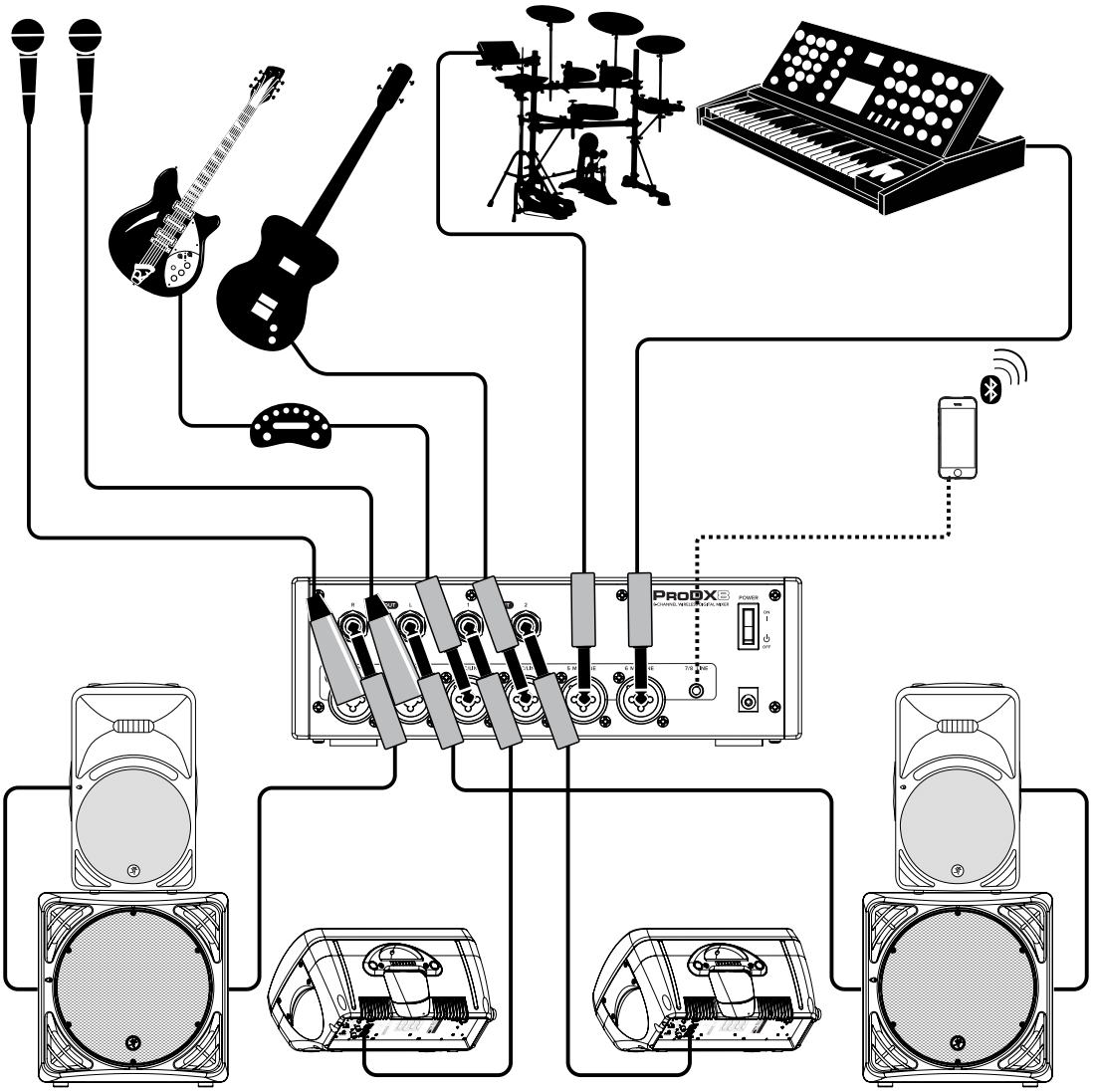

Those first two examples just barely scratch the surface of the capabilities of the ProDX...let's kick this thing into high gear! Here we have a (somewhat) typical band setup, be it at a local club or glorified band practice.

This ProDX has mics connected to the channel 1 and 2 inputs, a guitar (through effects processor) and bass directly into the channel 3 and 4 inputs...and we've only used half of our inputs at this point! Let's get our money's worth by connecting an electronic drum set to channel 5, an old-school synth to channel 6 and a smart phone to the 1/8" stereo channel 7/8 input (or connect via Bluetooth!) for intermission music. All input levels may be adjusted as described on page 10.

The house PA is a pair of SRM1550 subwoofers and SRM450 loudspeakers (connected to the main L/R out), while the front of the stage houses a couple of SRM450s (connected to the aux outs) that are used as wedges.

Band Setup

ProDX: Rear Panel Features

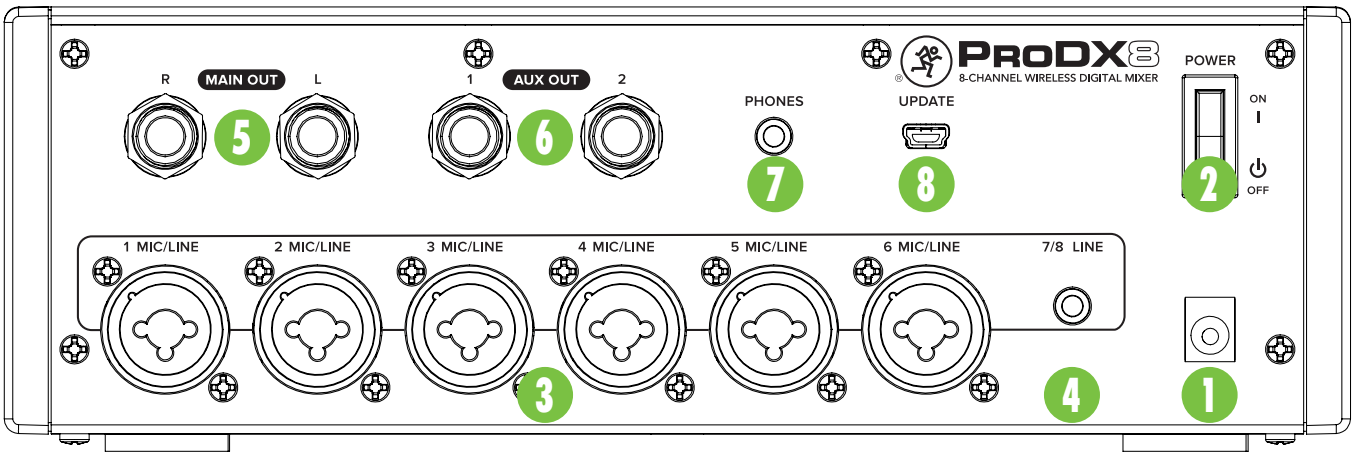

MixerConnect App

ProDX is designed to be used in conjunction with the MixerConnect app. With it, all of the hardware features listed here – and more! – may be controlled remotely via Bluetooth connection. The only thing the MixerConnect app can't do is turn the unit on and off or pair a Bluetooth device.

More information about the MixerConnect app may be found by reading the MixerConnect app Reference Guide.

1. Power Connector

Connect the supplied power cord by inserting the barrel connector into the jack on the rear of the ProDX mixer and plug the other end into a suitable and properly rated AC outlet.

Only use the factory-authorized power supply that came with your mixer.

2. Power Switch

Press the top of this rocker switch inwards to turn ProDX on and press the bottom of this rocker switch inwards to turn ProDX off.

3. XLR and 1/4" Combo Inputs

The ProDX4 has two Wide-Z™ combo inputs and the ProDX8 has six Wide-Z™ combo inputs. These input channels may accept a balanced mic signal using an XLR connector. They are wired as follows, according to standards specified by the AES (Audio Engineering Society).

XLR Balanced Wiring:

Pin 1 = Shield (ground)
Pin 2 = Positive (+ or hot)
Pin 3 = Negative (– or cold)

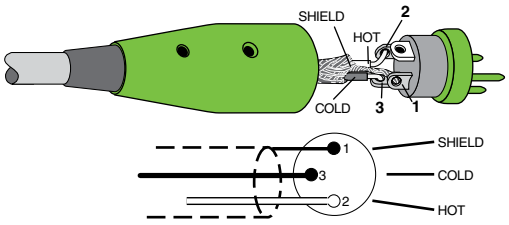

In addition to accepting balanced mic signals using an XLR connector, these inputs accept 1/4" line-level signals driven by unbalanced sources and/or Hi-Z sources (such as guitars) without the need for a separate DI box.

To connect Hi-Z or unbalanced lines to these inputs, use a 1/4" mono (TS) phone plug, wired as follows:

1/4" TS Unbalanced Mono Wiring:

Sleeve = Shield
Tip = Hot (+)

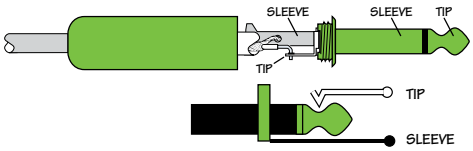

NEVER connect the output of an amplifier directly to a ProDX's input jack. This could damage the input circuitry and we wouldn't want that now, would we?

A channel is selected when a channel button [11] is engaged and the Mix button [15] is set to Main, Aux 1, Aux 2 [ProDX8 only], or FX. Then the level may be adjusted with the endless rotary knob. Pages 10-11 describe these two features and setting input and output levels.

ProDX: Rear Panel Features continued...

4. Bluetooth / Line In

This stereo input channel – 3/4 on ProDX4 and 7/8 on ProDX8 – may accept an 1/8" line-level signal from a smart phone, MP3 player, or other signal source. While not a "physical" connection, this is the same channel that is used for Bluetooth, too.

This channel is selected when the BT / Line In button [12] is engaged and the Mix button [15] is set to Main, Aux 1, Aux 2 [ProDX8 only], or FX. Then the level may be adjusted with the endless rotary knob. The next two pages describe these two features and setting input and output levels.

VERY IMPORTANT The Bluetooth may disconnect when affected by electrostatic discharge (ESD) or electrical fast transients (EFT). If this occurs, manually reconnect the Bluetooth connection.

VERY IMPORTANT NEVER connect the output of an amplifier directly to a ProDX's input jack. This could damage the input circuitry.

VERY IMPORTANT A Bluetooth connection and 1/8" line-level connection may NOT be used simultaneously. If there is a physical connection to the line input, it will take priority over any Bluetooth connection. For example, if you are playing a song from a smart phone (connected via Bluetooth) and connect an MP3 player to the 1/8" jack, the smart phone song will be interrupted and the MP3 player now takes precedence.

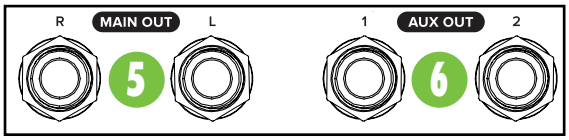

5. Main Out L/R

The 1/4" TRS output connectors provide balanced or unbalanced line-level signals that represents the end of the mixer chain, where your fully mixed stereo signal enters the real world. Connect these to the left and right inputs of your main power amplifiers, powered speakers, or serial effects processor (like a graphic equalizer or compressor/limiter).

The main out is selected when the MAIN button [14] is engaged and the Mix button [15] is set to MAIN. Then the level may be adjusted with the endless rotary knob. The next two pages describe these two features and setting input and output levels.

6. Aux Out

The ProDX4 has one aux out, while the ProDX8 has two aux outs. These balanced 1/4" connectors are fed a unique mix that's created with the pre fader aux levels for each channel. These line-level outputs are typically (but not always) utilized for connecting powered loudspeakers as monitors.

The aux out level is selected when the MAIN button [14] is engaged and the Mix button [15] is set to AUX1 (or AUX2). Then the level may be adjusted with the endless rotary knob. After five seconds of inactivity, the selection changes back to the default "MAIN". The next two pages describe these features and setting input and output levels.

7. Phones

This 1/8" connector supplies the output to stereo headphones. This is the same mix as the main L/R, but with its own independent output level. Headphones are selected with the headphones icon button [17] and the level may be adjusted with the endless rotary knob.

The phones output follows standard conventions:
Tip = Left channel
Ring = Right channel
Sleeve = Common ground

VERY IMPORTANT **WARNING:** The headphone amp is loud and can cause permanent hearing damage. Even intermediate levels may be painfully loud with some headphones. BE CAREFUL! Always turn the phones level control all the way down before connecting headphones or doing anything new that may affect the headphone volume. Then turn it up slowly as you listen carefully.

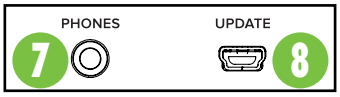

8. Update

If the mixer needs a firmware update, this is the place. Simply connect the ProDX to a Mac or Windows PC via mini USB, run the app, and follow the on-screen instructions.

NOTE There is absolutely no reason to do this *unless a firmware update is available* (which will be rare, if ever)...and you will know.

ProDX: Front Panel Features

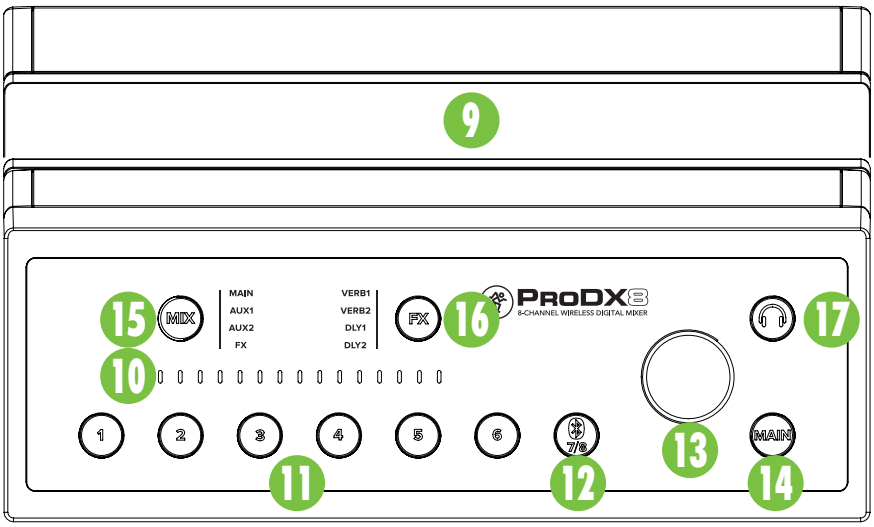

9. Control Bridge

The Control Bridge simply acts as a holster for your smart phone or (relatively small-sized) tablet. Place your device here for a hands-free, quick view of MixerConnect (as seen on the front cover).

10. Meters

This 15-segment LED display shows the output meter and channel levels in conjunction with the ProDX buttons and level control. These LEDs illuminate white when changing the level of the currently selected input or output and illuminate green – after five seconds of inactivity – to show the main output audio metering.

11. Channel Buttons

The ProDX4 has two channel buttons, while the ProDX8 has six channel buttons. Both models have an additional stereo input channel / Bluetooth button. Its functionality is described next [12].

The channel (input) buttons work in conjunction with the MIX button [15]. After selecting a mix, press a channel button to select it. It will illuminate white when selected. Once selected, raise or lower that channel's input level – be it the level going to the main outs, aux outs or FX – using the endless rotary level knob. The channel level will be shown with white LEDs. After five seconds of inactivity, the selection changes back to the default "MAIN".

VERY IMPORTANT

A channel button will illuminate red when that channel's input signal is too high, indicating a signal overload. This should be avoided, as distortion will occur. If you see this regularly, turn down the input at the source or lower the output of the mic by singing quieter or moving it further from the source.

12. Bluetooth / Line In Button

This input works similarly to the previously described channel buttons. After selecting a mix [15], press the Bluetooth / Line In button to select it. It will illuminate white when selected (whether a device is paired or not). Once selected, raise or lower the Bluetooth/Line input level – be it the level going to the main outs, aux outs or FX – using the endless rotary level knob. The channel level will be shown with white LEDs. After five seconds of inactivity, the selection changes back to the default "MAIN".

VERY IMPORTANT

Additionally, this button is used to pair a ProDX with a Bluetooth device. To enter pairing mode, press and hold the BT / Line In button. The button LED will illuminate and flash white while in pairing mode. While ProDX is in pairing mode, simultaneously scan for Bluetooth devices on your device. You should see ProDX appear in the "available devices" list. From there, your device should indicate that it is successfully connected. If it does not, start the pairing process again, and make sure that ProDX and your device are both in pairing mode at the same time. There are detailed instructions – with screen shots even! – regarding Bluetooth pairing in the MixerConnect Reference Guide. Check it out if you need any extra assistance.

NOTE

If a smart phone or MP3 player is plugged into the stereo input, the Bluetooth channel controls the level for this input.

NOTE

The device should be put into airplane mode during the performance so there are no interruptions!

VERY IMPORTANT

The Bluetooth may disconnect when affected by electrostatic discharge (ESD) or electrical fast transients (EFT). If this occurs, manually reconnect the Bluetooth connection.

13. Level

This endless rotary knob serves multiple purposes, as it adjusts the input levels, aux levels, FX levels and

output level, depending on which input or output is currently selected. Update by turning the level knob up (clockwise) or down (counter-clockwise).

NOTE The default selection is "MAIN". If other buttons are pressed, be sure to raise or lower that level within five seconds. After five seconds of inactivity, the selection changes back to the default "MAIN".

14. MAIN Button

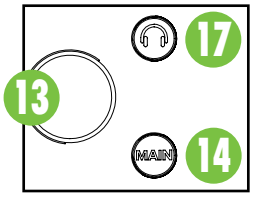

The MAIN (output levels) button works in conjunction with the MIX button [15]. After selecting a mix, press the MAIN button to select it. It will illuminate white when selected. Once selected, raise or lower the selected output level using the endless rotary level knob. The output level will be shown with white LEDs.

The MAIN button is the default, so if any other button has been selected, it will revert back to MAIN after five seconds of inactivity.

15. MIX Button

The MIX button works in conjunction with both the channel buttons [11, 12] and MAIN button [14]. Start by selecting a mix – MAIN [Default], AUX1, AUX2 [ProDX8 only], or FX – simply by pressing the MIX button repeatedly until the mix you want illuminates white.

Once a mix is selected, press a channel button to change the level of that channel going to the selected mix OR press the MAIN button to change the level of the output of the selected mix.

Now raise or lower the level using the endless rotary level knob. The level will be represented in the meters with white LEDs. After five seconds of inactivity, the selection changes back to the default "MAIN".

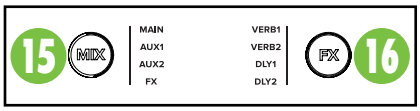

16. FX Button

ProDX includes 16 "gig ready" effects, including various reverbs, delays, choruses and combinations of these, as well.

There are four preset effects to choose from on the front panel of the ProDX including Verb 1, Verb 2, Delay 1, or Delay 2. Simply press the FX button repeatedly until the effect you want illuminates white.

Additional effects may be selected via MixerConnect. The app also adds control over the master FX return level. More information may be found in the MixerConnect Reference Guide.

NOTE Check out a more detailed description of each effect in Appendix C, page 17.

17. Phones Button

Press the phones icon button to select it. It will illuminate white when selected. Once selected, raise or lower the phones output level using the endless rotary level knob. This adjusts the level of the signal being sent to the phones output. This is the same mix as the main L/R, but with its own independent output level. The output level will be shown with white LEDs. After five seconds of inactivity, the selection changes back to the default "MAIN".

VERY IMPORTANT **WARNING:** The headphone amp is loud and can cause permanent hearing damage. Even intermediate levels may be painfully loud with some headphones. BE CAREFUL! Always turn the phones level control all the way down before connecting headphones or doing anything new that may affect the headphone volume. Then turn it up slowly as you listen carefully.

Factory Reset (aka Vulcan Mind Meld)

Since settings may be changed via MixerConnect, it may be necessary to reset the ProDX to its factory settings.

Please keep in mind that this erases all settings, including any levels, EQs, etc. that may have been set. Be sure to power down any amps and/or powered speakers before resetting ProDX.

Simply press and hold the Channel 1, Channel 2 and MAIN buttons simultaneously for a few seconds to reset the ProDX to its factory settings.

VERY IMPORTANT If you use the factory default key combination, you are also wiping the ProDX's memory of previously paired devices. To remedy this, on your smartphone, tablet or other Bluetooth device, you will need to 'forget device' in the Bluetooth settings, then re-pair in order to regain communication and functionality.

Wrap-Up

These ProDX mixers are a pretty cool unit just by themselves with plenty of features to go around. Having said that, a whole new world opens up once paired with a smart phone loaded with the FREE MixerConnect app. This document, though, simply describes the features present within the mixer alone, the hardware. Therefore, we strongly suggest reading and reviewing the MixerConnect Reference Guide to learn how it works in conjunction with your ProDX mixer. Happy mixing!

Appendix A: Service Information

If you think your ProDX has a problem, please check out the following troubleshooting tips and do your best to confirm the problem. Visit the Support section of our website (www.mackie.com/support) where you will find lots of useful information such as FAQs and other documentation. You may find the answer to the problem without having to send your ProDX away.

Troubleshooting

No power

- Our favorite question: Is it plugged in? Make sure the AC outlet is live [check with a tester or lamp].
- Our next favorite question: Is the power switch on? If not, try turning it on.
- The internal AC line fuse may be blown. This is not a user serviceable part. If you suspect the AC line fuse is blown, please see the "Repair" section next.

No sound

- Is the input level control for the input source turned all the way down? Verify that all the level controls in the system are properly adjusted. Look at the level meter to ensure that the ProDX is receiving a signal.
- Is the signal source working? Make sure the connecting cables are in good repair and securely connected at both ends. Make sure the output level control of the source is turned up sufficiently.
- Make sure the source(s) are not turned off or muted. If you find something like this, make sure the level is turned down before disengaging the offending switch.

Poor sound

- Is it loud and distorted? Make sure that you're not overdriving a stage in the signal chain. Verify that all level controls are set properly.
- Is the input connector plugged completely into the jack? Be sure all connections are secure.

Noise

- Make sure all connections to the ProDX are good and sound.
- Make sure none of the signal cables are routed near AC cables, power transformers, or other EMI-inducing devices.
- Is there a light dimmer or other SCR-based device on the same AC circuit as the ProDX? Use an AC line filter or plug the ProDX into a different AC circuit.

Hum

- Try disconnecting the cable connected to the main input jack. If the noise disappears, it could be a "ground loop," rather than a problem with the ProDX. Try some of the following troubleshooting ideas:
- Use balanced connections throughout your system for the best noise rejection.
- Whenever possible, plug all the audio equipment's line cords into outlets which share a common ground. The distance between the outlets and the common ground should be as short as possible.

Bluetooth Issues

- Please call Technical Support if you are having Bluetooth connection issues: 1-800-898-3211

Repair

For warranty service, refer to the warranty information on page 18.

Non-warranty service for ProDX is available at a factory-authorized service center. To locate the nearest service center, visit www.mackie.com, click "Support" and select "Locate a Service Center." Service for a ProDX living outside the United States can be obtained through local dealers or distributors.

If you do not have access to our website, you may call the Tech Support department at 1-800-898-3211, Monday-Friday, during normal business hours, Pacific Time, to explain the problem. Tech Support will tell you where the nearest factory-authorized service center is located in your area.

Appendix B: Technical Information

ProDX Specifications

General Digital

Sample Rate	48 kHz
A/D/A Bit Depth	24-bit
System Latency	<2 ms

Frequency Response

All inputs to all outputs	20 Hz to 20 kHz, ±1 dB

Noise / Crosstalk / Dynamic Range

THD+N	
Mic input to Main output, –25 dBu input	<0.005% (20 Hz – 20 kHz, A-weighted)
Crosstalk	
Adjacent Inputs	<–85 dB
Outputs	<–85 dB
Dynamic Range	
Mic input to Main output, A-weighted	105 dB

Maximum Levels (1% THD+N)

XLR Inputs	–12 dBu
1/4" Inputs	+14 dBu
1/8" Input	+9 dBu
Main Out	+14 dBu
Aux Out	+14 dBu
Headphone Out	180 mW into 600 Ω

Impedances

XLR	10 kΩ balanced
1/4"	>5 MΩ unbalanced
1/8"	9 kΩ unbalanced
Phones output	10 Ω unbalanced
All other outputs	100 Ω unbalanced / 200 Ω balanced

Channel Processing

Low Cut	Off, 20 Hz – 400 Hz, 12 dB / octave
Low Shelving	±12 dB @ 80 Hz
Mid-Peaking	±12 dB sweep 100 Hz – 8 kHz
High Shelving	±12 dB @ 12.5 kHz
Compression	Single slider, off to max

System Processing

FX	16 presets
Output GEQ	7-Band, ±12 dB, 125, 250, 500, 1k, 2k, 4k, 8k
Memory Presets	3

Power

External Supply	
Power Requirements	100 – 240 VAC, 50/60 Hz, Universal Supply, 18VDC, 0.5 Amps
Operating Temperature	0˚ – 40˚C 32˚ – 104˚F

Bluetooth Information

Bluetooth Protocol	3.0
Bluetooth Function	Audio Streaming and User Interface Control

Physical Properties

ProDX4

Height	3.0 in / 76 mm
Width	6.3 in / 160 mm
Depth	5.5 in / 140 mm
Weight	2.2 lb / 1.0 kg

ProDX8

Height	3.0 in / 76 mm
Width	9.1 in / 230 mm
Depth	5.5 in / 140 mm
Weight	3.2 lb / 1.5 kg

Options

ProDX4 Bag	P/N 2036809-40
ProDX8 Bag	P/N 2036809-40

Disclaimer

Since we are always striving to make our products better by incorporating new and improved materials, components, and manufacturing methods, we reserve the right to change these specifications at any time without notice.

The "Running Man" figure is a registered trademark of LOUD Technologies Inc.

All other brand names mentioned are trademarks or registered trademarks of their respective holders, and are hereby acknowledged.

©2016 LOUD Technologies Inc.
All Rights Reserved.

ProDX4 Dimensions

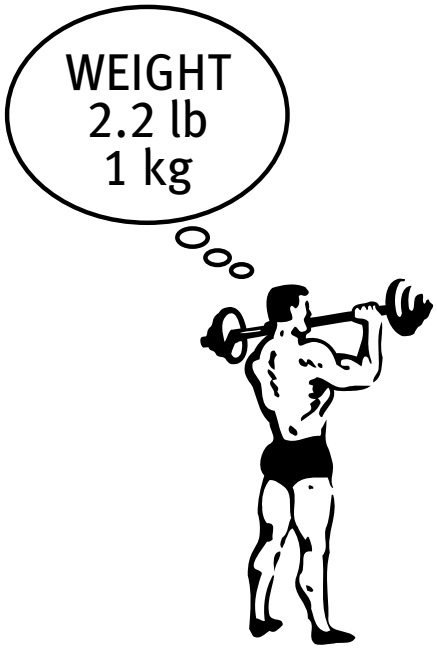

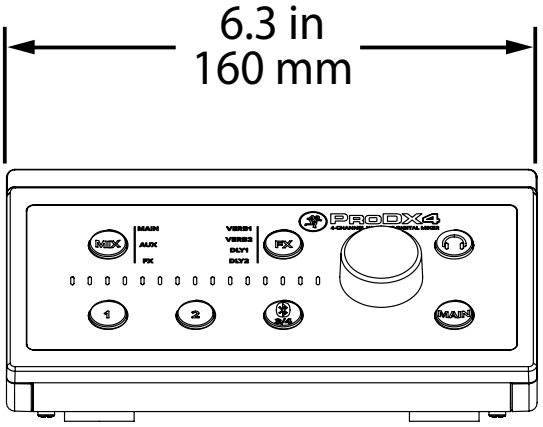

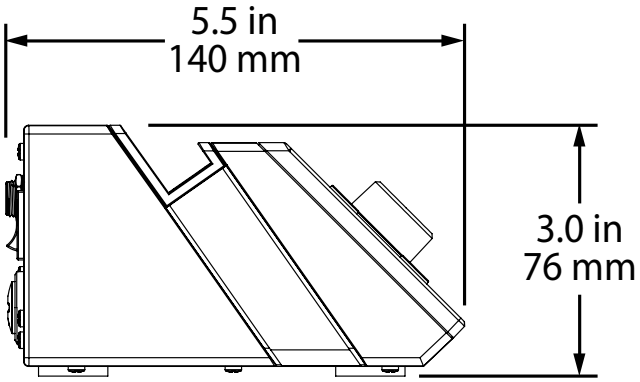

ProDX8 Dimensions

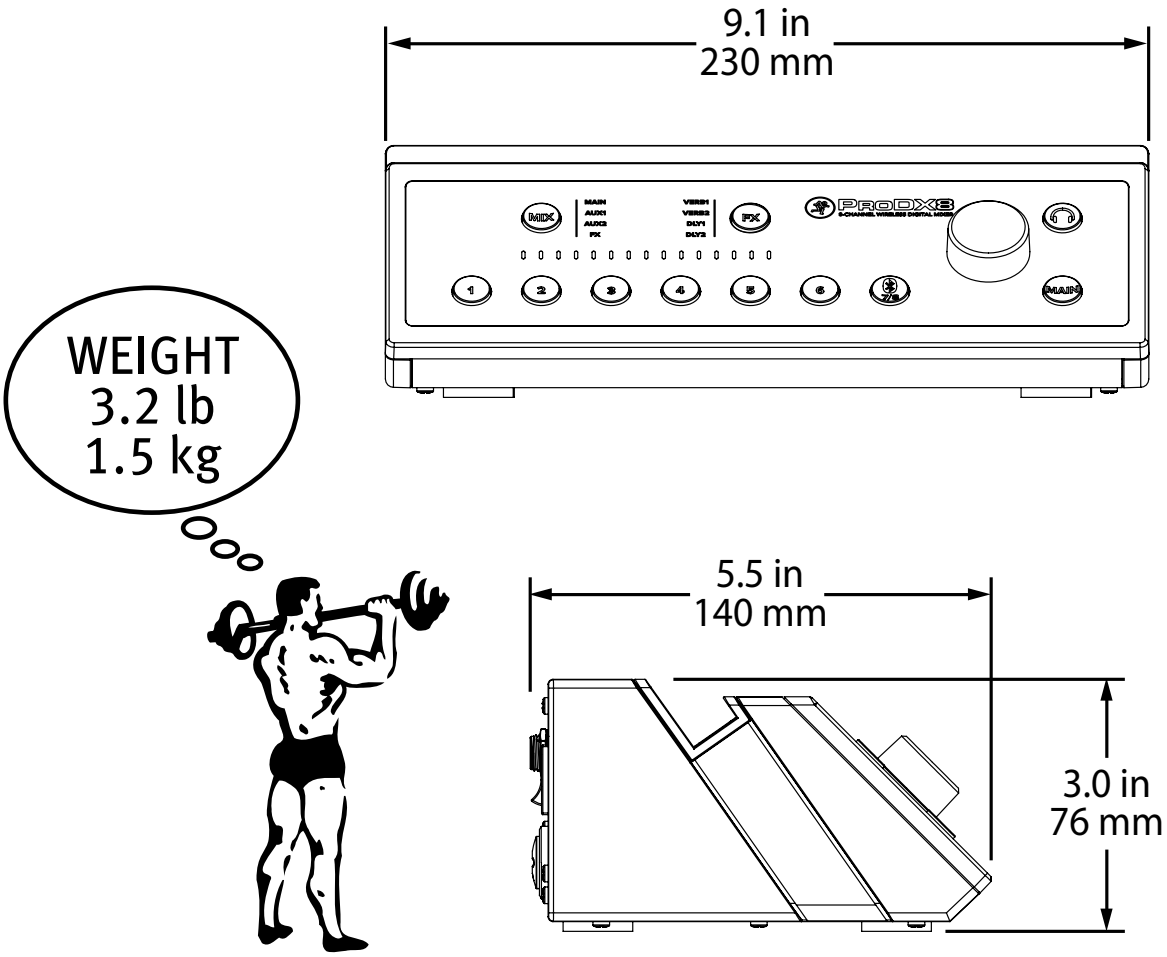

ProDX Block Diagram

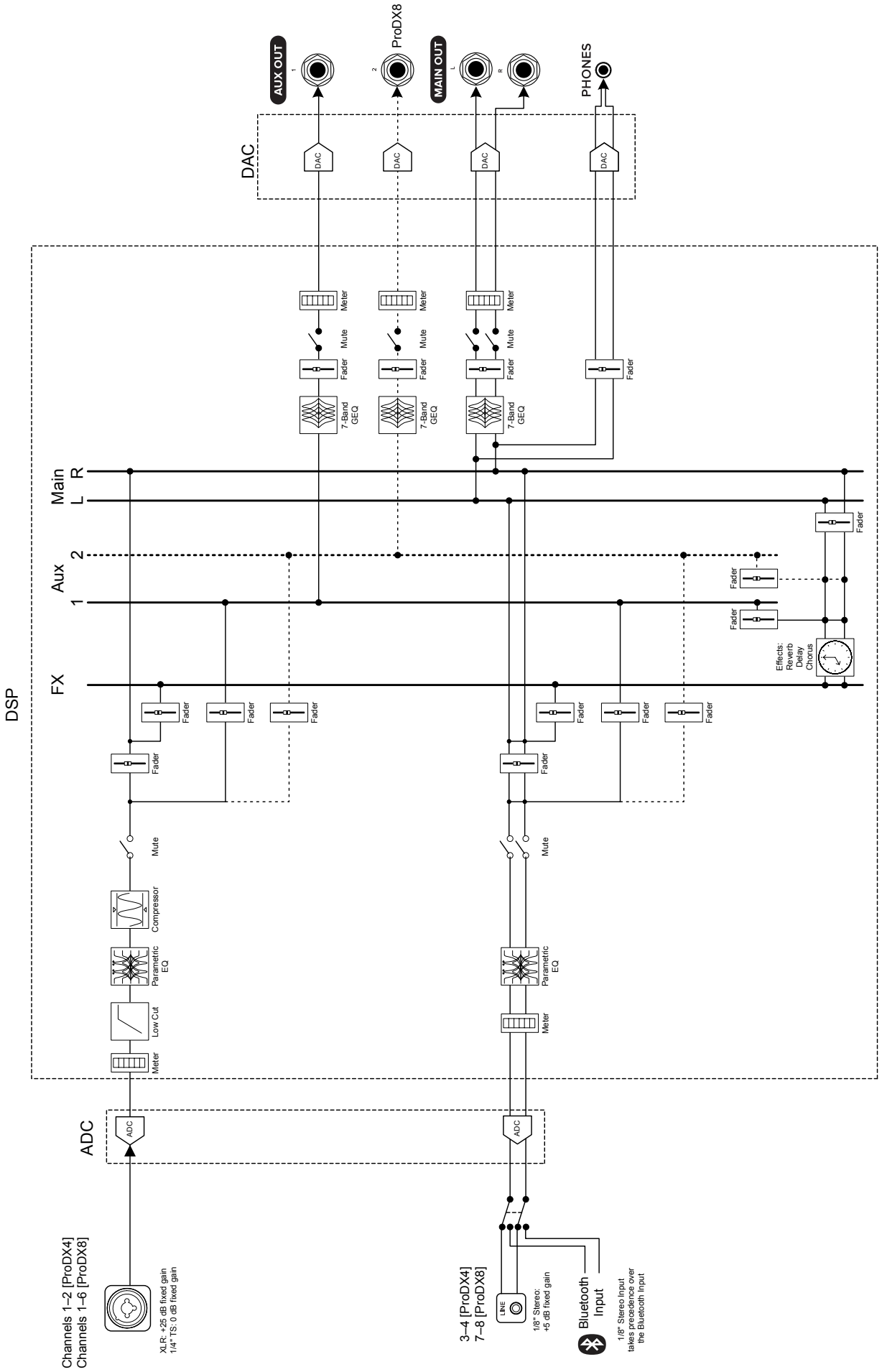

Appendix C: Table of Effects Presets

All FX listed below may be accessed via the MixerConnect app. Descriptions and examples of the four FX that are accessed via ProDX [Verb 1, Verb 2, Delay 1 and Delay 2] are noted in the *Title* column.

No FX on ProDX will illuminate when an FX is selected via the MixerConnect app.

Title	**Description**	**Example of its use**
Bright Room	This room has a bright tone with lots of scattered reflections to simulate harder, more reflective surfaces.	Useful on vocals that require a brighter reverb to cut through the mix, or for giving acoustic instruments a livelier vibe.
Warm Lounge	This preset features a medium sized room sound, with just enough enhancement of the lower mids to produce a warm tone.	Useful for vocals on songs that require a larger, more "wet" sound, or for giving dimension to bright horns without adding harshness.
Small Stage	This preset simulates the sound of a small concert stage, with a medium reverb time and reverberant space.	Useful for vocals or guitars in fast paced, high-energy songs that call for a "live" sounding reverberation.
Warm Theater [*Verb 2* on ProDX]	This reverb has a warm bodied tone and medium long reverb time to simulate the live acoustics of a theater space.	Perfect for vocals, drums, acoustic and electric guitars, keyboards and more.
Warm Hall	This reverb simulates the sound of a spacious, yet cozy, heavily draped and carpeted concert hall with an especially warm tone.	Perfect for adding natural concert hall ambience to close-mic'ed orchestral instruments.
Concert Hall	This hall reverb is characterized by its large, spacious sound, long pre-delay, and vibrant tone.	Adds life to acoustic instruments and vocals from solos to full-on symphonies and choirs.
Plate Reverb [*Verb 1* on ProDX]	This preset emulates vintage mechanical reverberation that was generated with a metal plate. Its sound is characterized by lots of early reflections and no pre-delay.	Perfect for thickening percussive instruments, such as a snare drum, or tight vocal arrangements.
Cathedral	This reverb emulates the extremely long tails, dense diffusion and long pre-delays and reflections that would be found in a very large, stone walled house of worship.	Gives amazing depth to choirs, wind instruments, organs and soft acoustic guitars.
Chorus	This preset provides a soft, ethereal sweeping effect that is useful for thickening and for making a particular sound pop out of the mix.	Perfect for enhancement of electric and acoustic guitar and bass, or to add a dramatic effect to vocals, particularly group harmonies and choirs.
Chorus + Reverb	This preset perfectly combines the chorus effect above with a large, roomy reverb.	This effect thickens the sound with chorus while adding warmth and spaciousness thanks to the smooth reverb.
Doubler	This effect simulates the sound of a vocal or instrument being recorded twice (double-tracked) on a multi-track recorder.	Provides a vibe that is similar to chorus without the subtle swirl.
Tape Slap [*Delay 1* on ProDX]	This effect provides a single, relatively rapid delay of the original signal, with the added warmth that vintage tape-based echo units provided.	Often used on vocals for a 1950's era feel, or on guitars for a surf-type tone. Often used by people whose favorite number is 13.
Delay 1 [*Delay 2* on ProDX]	This preset provides 300 ms delay. The smaller the delay time, the faster the delay.	This FX works best with full, up-beat music like rock where the delay needs to cut through the mix.
Delay 2	This preset provides 380 ms delay. The smaller the delay time, the faster the delay.	This FX works best with full, up-beat music like rock where the delay needs to cut through the mix.
Delay 3	This preset provides 480 ms delay. The smaller the delay time, the faster the delay.	This FX works best with full, up-beat music like rock where the delay needs to cut through the mix.
Reverb + Delay	This effect combines the Warm Theater reverb effect with the echoes of the 3-repeat delay effect.	Perfect for thickening vocals while adding dimensions, it can also be used as a spacey effect on electric guitars.

Limited Warranty

Please keep your sales receipt in a safe place.

This Limited Product Warranty ("Product Warranty") is provided by LOUD Technologies Inc. ("LOUD") and is applicable to products purchased in the United States or Canada through a LOUD-authorized reseller or dealer. The Product Warranty will not extend to anyone other than the original purchaser of the product (hereinafter, "Customer," "you" or "your").

For products purchased outside the U.S. or Canada, please visit www.mackie.com/warranty to find contact information for your local distributor, and information on any warranty coverage provided by the distributor in your local market.

LOUD warrants to Customer that the product will be free from defects in materials and workmanship under normal use during the Warranty Period. If the product fails to conform to the warranty then LOUD or its authorized service representative will at its option, either repair or replace any such nonconforming product, provided that Customer gives notice of the noncompliance within the Warranty Period to the Company at: www.mackie.com/support or by calling LOUD technical support at 1.800.898.3211 (toll-free in the U.S. and Canada) during normal business hours Pacific Time, excluding weekends or LOUD holidays. Please retain the original dated sales receipt as evidence of the date of purchase. You will need it to obtain any warranty service.

For full terms and conditions, as well as the specific duration of the Warranty for this product, please visit www.mackie.com/warranty.

The Product Warranty, together with your invoice or receipt, and the terms and conditions located at www.mackie.com/warranty constitutes the entire agreement, and supersedes any and all prior agreements between LOUD and Customer related to the subject matter hereof. No amendment, modification or waiver of any of the provisions of this Product Warranty will be valid unless set forth in a written instrument signed by the party to be bound thereby.

Need help with ProDX?

- Visit www.mackie.com and click Support to find: FAQs, manuals, addendums, and other documents.
- Telephone 1-800-898-3211 to speak with one of our splendid technical support chaps (Monday through Friday, normal business hours, Pacific Time).

16220 Wood-Red Road NE
Woodinville, WA 98072 • USA
Phone: 425.487.4333
Toll-free: 800.898.3211
Fax: 425.487.4337
www.mackie.com